CATALOGUE

BALL VALVES LD

for liquid media

CONTENTS

About us 1
Application and technical data 2
LD ball valve construction and materials of main parts 3
Shut off ball valve reduced bore DN15-DN800 (welding/welding) 4
Shut off ball valve full bore DN15-DN800 (welding/welding) 5
Shut off ball valve reduced bore DN15-DN800 (flange/flange) 6
Shut off ball valve full bore DN15-DN800 (flange/flange) 7
Shut off ball valve reduced bore/full bore (thread/thread) 8
Shut off service ball valve (thread/welding) 9
Shut off ball valve reduced bore (flange/welding) 10
Underground ball valve according to EN 488 reduced bore DN25-DN500 11
Underground ball valve according to EN488 full bore DN25-DN500 12
Underground ball valve for air release DN15-DN50 13
Branching valve DN20-DN200 (welding/welding) 14
Hot tapping valve DN25-DN200 (flange/welding) 15
Shut off ball valve with manual gear 16
Shut off ball valve with electric actuator 18
Technical data of AUMA actuators for LD valves 19
Control ball valve Regula series (KV values) 20
Control ball valve Regula reduced bore (welding/welding) 21
Control ball valve Regula reduced bore (flange/flange) 22
Installation instructions 23
KV values 24
CE Certificate (PED 2014/68/EU) 25
EN 488:2015/EHP003 25

ABOUT US

LLC CHSGS - as part of LD GROUP - is a leading Russian manufacturer of steel valves for district heating/cooling, natural gas, petroleum products and chemical industry.

Established in 2002, the plant produces and distributes 1 200 000 items per year.

Today, LD is a famous quality mark recognized not only in Russia and CIS countries but also in Armenia, Azerbaijan, Belarus, Bulgaria, Estonia, Finland, Hungary, Kazakhstan, Kyrgyzstan, Latvia, Lithuania, Moldavia, Mongolia, Poland, Romania, Serbia, Slovakia, Sweden, Ukraine, Uzbekistan.

We comply with all necessary international requirements and standards, such as ISO 9001:2015, PED 2014/68/EU, EN 488:2015

In order to guarantee competitive price and high quality only domestically produced raw materials are used for production of LD ball valves. For timely delivery, warehouses in Saint-Petersburg, Moscow and Novosibirsk are at your convenience and service.

APPLICATION AND TECHNICAL DATA

LD ball valve major features:

- DN 15 – 800, PN up to 40 bar
- Working media temp. -40^{0}C (-60^{0}C) to +200^{0}C, ambient temp. -40^{0}C (-60^{0}C) to +80^{0}C

Materials:

- carbon steel (Steel 20, 1.1151) for district heating/cooling, oil and gas (climate class N)
- alloyed steel (09G2S) for district heating/cooling, oil and gas (climate class NF)
- stainless steel (AISI 321, 1.4541) for utility water, non-aggressive media
- stainless steel (AISI 321, 1.4541) for chemical industry (aggressive media)

- Tightness A rate acc. to EN12266-1
- Service life 30 years (10 000 cycles)
- Warranty 5 years

LD BALL VALVE CONSTRUCTION

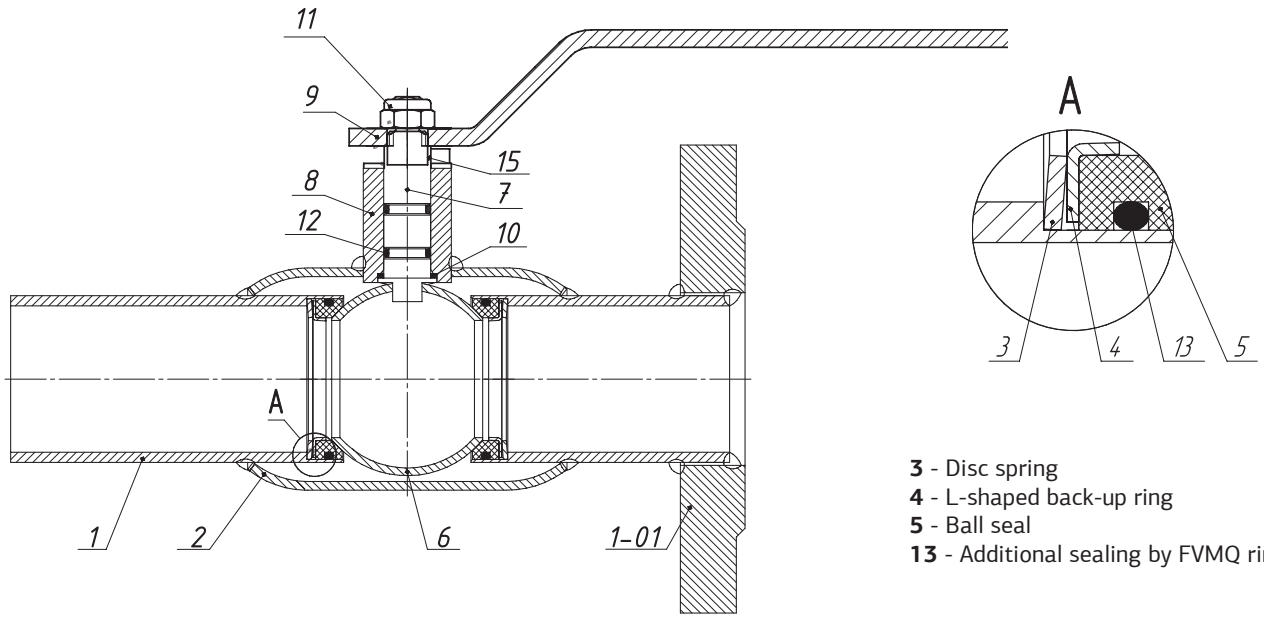

3 - Disc spring
4 - L-shaped back-up ring
5 - Ball seal
13 - Additional sealing by FVMQ ring

MATERIALS OF MAIN PARTS

No.		Climate class N	Climate class NF		
	Material code	**02**	**03**	**01**	**01 - Energy**
	Steel grade	**Carbon steel**	**Alloyed steel**	**Stainless steel**	**Stainless steel**
	Application	**District heating/cooling, oil and oil products**	**District heating/cooling, oil and oil products**	**Utility water, non-aggressive media**	**Chemical industry, aggressive media**
1	**Welding end**	Carbon steel	Alloyed steel. Seamless pipe	AISI 321	AISI 321
1-01	**Flange**	Carbon steel	Alloyed steel	AISI 321	AISI 321
2	**Body**	Carbon steel	Alloyed steel. Seamless pipe	AISI 321	AISI 321
3	**Disc spring**	Zinc plated spring steel	Zinc plated spring steel	Zinc plated spring steel	AISI 321
4	**L-shaped back-up ring**	AISI 409	AISI 409	AISI 409	AISI 321
5	**Ball seal**	PTFE+C	PTFE+C	PTFE+C	PTFE+C
6	**Ball**	AISI 304, AISI 409	AISI 304, AISI 409	AISI 304, AISI 409	AISI 321
7	**Stem**	AISI 420	AISI 420	AISI 420	AISI 321
8	**Stem shell**	Carbon steel	Alloyed steel	AISI 321	AISI 321
9	**Handle**	PTFE	PTFE	PTFE	PTFE
10	**Washer**	Zinc-plated steel with polymer	Zinc-plated steel with polymer	Corrosion resistant steel with polymer	Corrosion resistant steel with polymer
11	**Nut**	Zinc plated steel	Zinc plated steel	Zinc plated steel	Zinc plated steel
12	**Stem sealing ring**	EPDM, FVMQ	EPDM, FVMQ	EPDM, FVMQ	FVMQ
13	**O-ring**	FVMQ	FVMQ	FVMQ	FVMQ
	Working conditions and features	Working media temp. -40°C to +200°C	Working media temp. -60°C to +200°C	Working media temp. -60°C to +200°C	Working media temp. -60°C to +200°C

BALL VALVE REDUCED BORE

WELD/WELD

MATERIAL SPECIFICATION (Mat. code 02)

Body: carbon steel
Stem: stainless steel AISI 420
Ball: stainless steel AISI 304, AISI 409
Stem seal: EPDM, FVMQ
Ball seal: PTFE+C with additional seal made of FVMQ

OPERATION

- **DN 15-250:** lever – painted carbon steel with polymer end
- **DN 200-250:** ISO top flange for manual gear on default
- **DN 300-800:** manual gearbox on default

Gearbox in horizontal arrangement on default

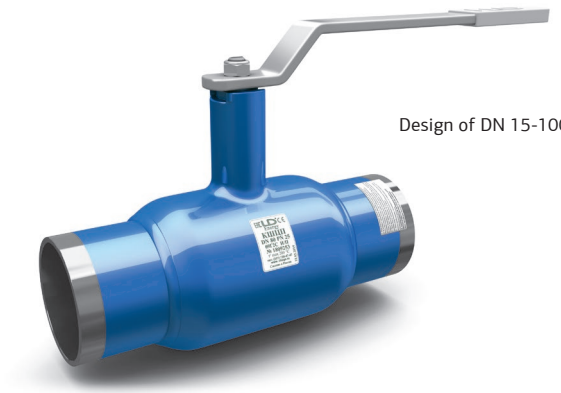

Design of DN 15-100

DN15-100

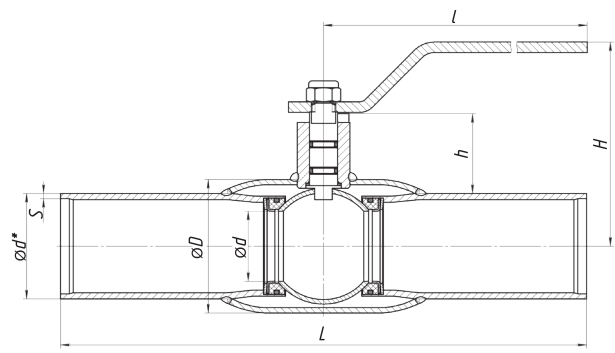

DN125-250

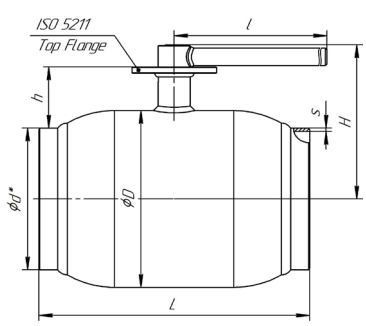

DN300-500

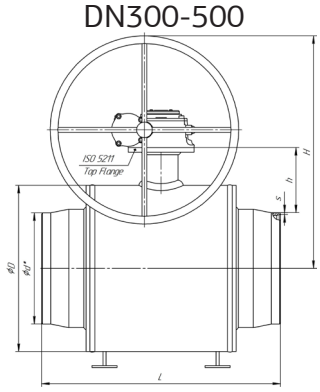

DN600-800

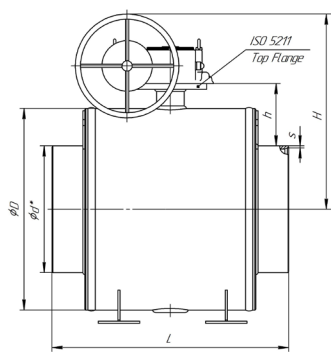

TECHNICAL DATA

DN	PN	CODE	d	d*	s	D	h	H	l	L**	Weight, kg
15	40	2159402	10	21,3	2,0	38	23	98	159	230	0,8
20	40	2209402	15	26,9	2,3	42	21	98	159	230	0,8
25	40	2259402	18	33,7	2,6	48	21	101	159	230	1,1
32	40	2329402	24	42,4	2,6	57	23	106	159	260	1,5
40	40	2409402	30	48,3	2,6	60	39	108	217	260	2
50	40	2509402	40	60,3	2,9	76	43	116	217	300	2,6
65	25	2659252	49	76,1	2,9	89	39	121	217	300	3,4
80	25	2809252	63	88,9	3,2	114	61	155	314,5	300	5,3
100	25	21009252	75	114,3	3,6	133	61	165	314,5	325	6,7
125	25	21259252	100	139,7	4,0	180	73	195	525	325	15,3
150	25	21509252	125	168,3	4,5	219	77	210	525	350	20,6
200	25	22009252	148	219,1	4,5	273	67	230	625	400	36
250	25	22509252	200	273,0	5,0	351	80	275	625	530	54
300*	25	23009252/G	240	323,9	5,6	426	167	-	-	730	120
350*	25	23509252/G	300	355,6	6,3	530	195	-	-	730	230
400*	25	24009252/G	305	406,4	7,0	530	170	-	-	860	280
500*	25	25009252/G	390	508,0	7,0	630	170	-	-	970	450
600*	25	26009252/G	500	610	7,1	820	220	-	-	1143	790
700*	25	27009252/G	600	711	8,0	1020	245	-	-	1346	990
800*	25	28009252/G	700	813	8,8	1120	310	-	-	1346	2400

*To be supplied with a gearbox on default. H indicated for valve with gearbox.
** Other measurements on request.

BALL VALVE FULL BORE

WELD/WELD

MATERIAL SPECIFICATION (Mat. code 02)

Body: carbon steel
Stem: stainless steel AISI 420
Ball: stainless steel AISI 304, AISI 409
Stem seal: EPDM, FVMQ
Ball seal: PTFE+C with additional seal made of FVMQ

OPERATION

- **DN 15-200:** lever – painted carbon steel with polymer end
- **DN 150-200:** ISO top flange for manual gearbox with worm gear installation
- **DN 250-700:** manual gearbox on default

Gearbox in horizontal arrangement on default

Design of DN 500-700

DN15-80

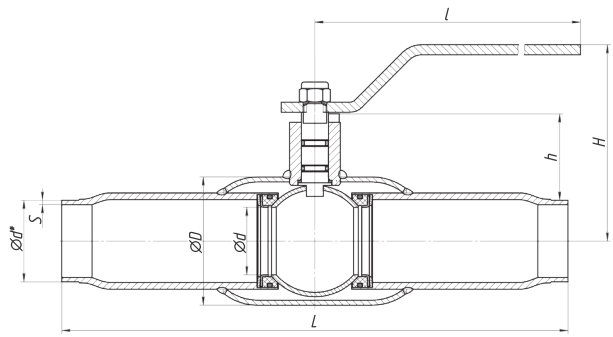

DN100-200

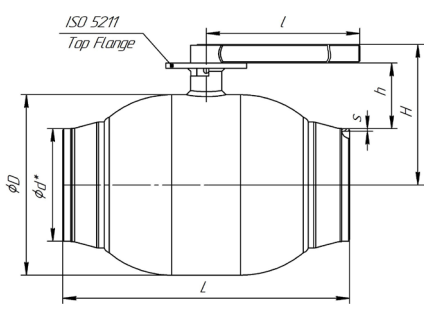

DN250-400

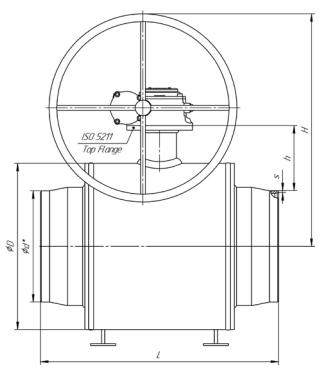

DN500-700

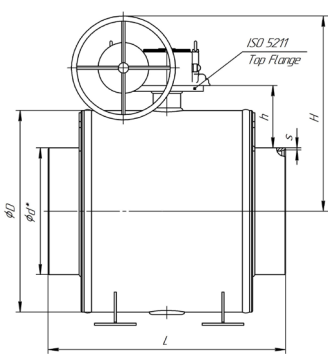

TECHNICAL DATA

DN	PN	CODE	d	d*	s	D	h	H	l	L**	Weight, kg
15	40	215402	15	21,3	2,0	27	23	98	159	230	0,8
20	40	220402	18	26,9	2,3	32	21	98	159	230	1,1
25	40	225402	24	33,7	2,6	38	21	101	159	260	1,5
32	40	232402	30	42,4	2,6	48	23	106	217	260	2
40	40	240402	40	48,3	2,9	57	39	108	217	300	2,6
50	40	250402	49	60,3	2,9	76	43	116	217	300	3,4
65	25	265252	63	76,1	3,2	89	39	121	314,5	300	5,3
80	25	280252	75	88,9	3,6	108	61	155	314,5	325	6,7
100	25	2100252	100	114,3	3,6	133	61	165	525	325	15,3
125	25	2125252	125	139,7	3,6	159	73	195	525	360	20,6
150	25	2150252	148	168,3	5,0	180	77	210	625	400	29,6
200	25	2200252	200	219,1	5,0	245	67	230	625	530	53
250*	25	2250252/G	240	273,0	5,0	325	80	275	-	730	120
300*	25	2300252/G	300	323,9	5,6	377	167	-	-	730	230
350*	25	2350252/G	390	355,6	6,3	630	247	-	-	970	376
400*	25	2400252/G	390	406,0	6,3	426	170	-	-	970	450
500*	25	2500252/G	500	508,0	7,1	820	270	-	-	991	765
600*	25	2600252/G	600	610	7,1	1020	290	-	-	1143	1050
700*	25	2700252/G	700	711	8,0	1120	360	-	-	1346	2300

*To be supplied with a gearbox on default. H indicated for valve with gearbox.
** Other measurements on request.

BALL VALVE REDUCED BORE

FLANGE/FLANGE

MATERIAL SPECIFICATION (Mat. code 02)

Body: carbon steel
Stem: stainless steel AISI 420
Ball: stainless steel AISI 304, AISI 409
Stem seal: EPDM, FVMQ
Ball seal: PTFE+C with additional seal made of FVMQ

OPERATION

- **DN 15-250:** lever – painted carbon steel with polymer end
- **DN 200-250:** ISO top flange for manual gear on default
- **DN 300-800:** manual gearbox on default

Gearbox in horizontal arrangement on default

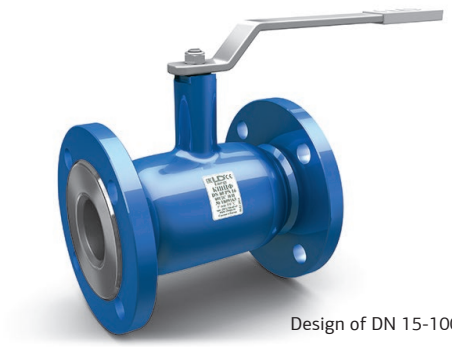

Design of DN 15-100

DN15-100

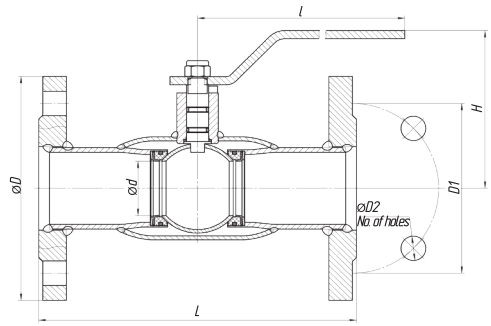

DN125-250

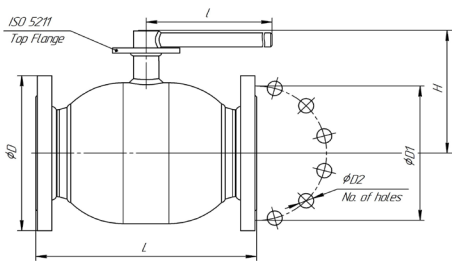

DN300-500

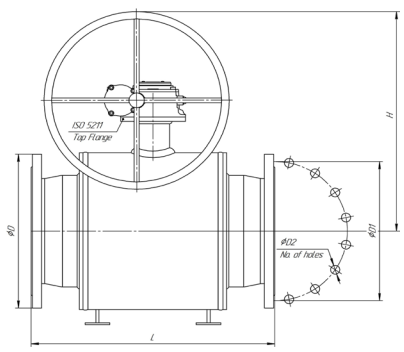

DN600-800

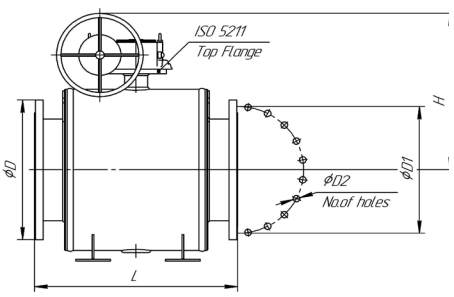

TECHNICAL DATA

DN	PN	CODE	d	D	D1	D2	No. of holes	H	l	L**	Weight, kg
15	40	1159402	10	95	65	14	4	98	159	130	1,8
20	40	1209402	15	105	75	14	4	98	159	150	2,2
25	40	1259402	18	115	85	14	4	101	159	160	2,7
32	40	1329402	24	140	100	18	4	106	159	180	3,7
40	40	1409402	30	150	110	18	4	108	217	200	4,6
50	40	1509402	40	165	125	18	4	116	217	230	6,1
65	16	1659162	49	185	145	18	8	121	217	270	8,4
65	25	1659252	49	185	145	18	8	121	217	270	8,4
80	16	1809162	63	200	160	18	8	155	314,5	280	11,2
80	25	1809252	63	200	160	18	8	155	314,5	280	12
100	16	11009162	75	220	180	18	8	165	314,5	300	15
100	25	11009252	75	235	190	22	8	165	314,5	300	15
125	16	11259162	100	250	210	18	8	195	525	325	27,7
125	25	11259252	100	270	220	26	8	195	525	325	28,5
150	16	11509162	125	285	240	22	8	210	525	350	36
150	25	11509252	125	300	250	26	8	210	525	350	37
200	16	12009162	148	340	295	22	12	230	625	400	56
200	25	12009252	148	360	310	26	12	230	625	400	57
250	16	12509162	200	405	355	26	12	275	625	530	83
250	25	12509252	200	425	370	30	12	275	625	530	85
300*	16	13009162/G	240	460	410	26	12	-	-	750	155
300*	25	13009252/G	240	485	430	30	16	-	-	750	155
350*	16	13509162/G	300	520	470	26	16	-	-	750	235
350*	25	13509252/G	300	555	490	33	16	-	-	750	248
400*	16	14009162/G	305	580	525	30	16	-	-	880	300
400*	25	14009252/G	305	620	550	36	16	-	-	880	327
500*	16	15009162/G	390	715	650	33	20	-	-	990	462
500*	25	15009252/G	390	730	660	36	20	-	-	990	483
600*	16	16009162/G	500	840	770	36	20	-	-	1173	950
600*	25	16009252/G	500	845	770	39	20	-	-	1173	972
700*	16	17009162/G	600	910	840	36	24	-	-	1376	1160
700*	25	17009252/G	600	960	875	42	24	-	-	1376	1245
800*	16	18009162/G	700	1025	950	39	24	-	-	1376	2600
800*	25	18009252/G	700	1085	990	48	24	-	-	1376	2800

*To be supplied with a gearbox on default. H indicated for valve with gearbox.
** Other measurements on request.

BALL VALVE FULL BORE

FLANGE/FLANGE

MATERIAL SPECIFICATION (Mat. code 02)

Body: carbon steel
Stem: stainless steel AISI 420
Ball: stainless steel AISI 304, AISI 409
Stem seal: EPDM, FVMQ
Ball seal: PTFE+C with additional seal made of FVMQ

Design of DN 500-700

OPERATION

- **DN 15-200:** lever – painted carbon steel with polymer end
- **DN 150-200:** ISO top flange for manual gear on default
- **DN 250-800:** manual gearbox on default

Gearbox in horizontal arrangement on default

DN15-80

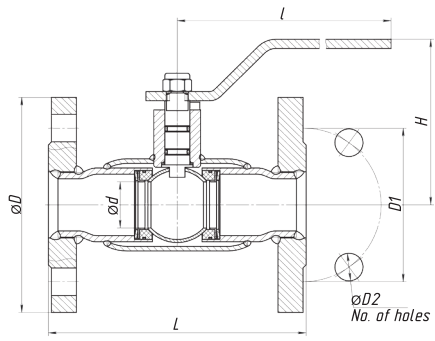

DN100-200

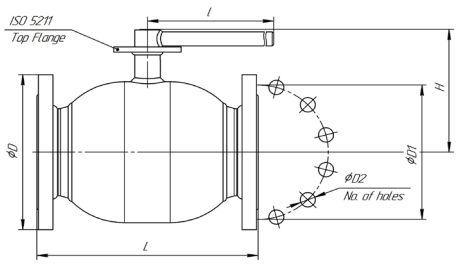

DN250-400

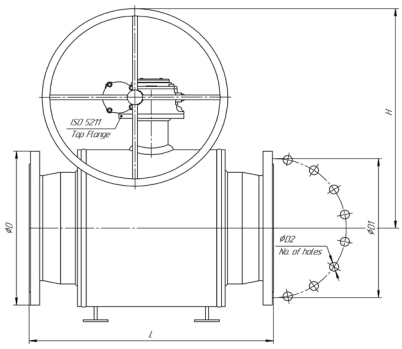

DN500-700

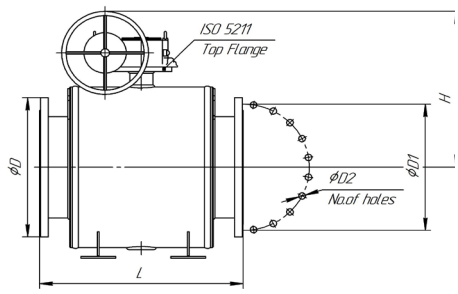

TECHNICAL DATA

DN	PN	CODE	d	D	D1	D2	No. of holes	H	l	L**	Weight, kg
15	40	115402	15	95	65	14	4	98	159	120	1,9
20	40	120402	18	105	75	14	4	98	159	140	2,5
25	40	125402	24	115	85	14	4	101	159	140	3,1
32	40	132402	30	140	100	18	4	106	217	165	4,2
40	40	140402	40	150	110	18	4	108	217	290	5,3
50	40	150402	49	165	125	18	4	116	217	300	7,1
65	16	165162	63	185	145	18	8	121	314,5	300	10,8
65	25	162252	63	185	145	18	8	121	314,5	300	10,8
80	16	180162	75	200	160	18	8	155	314,5	320	12,5
80	25	180252	75	200	160	18	8	155	314,5	320	12,5
100	16	1100162	100	220	180	18	8	165	525	350	23,2
100	25	1100252	100	235	190	22	8	165	525	350	23,2
125	16	1125162	125	250	210	18	8	195	525	380	33,4
125	25	1125252	125	270	220	26	8	195	525	380	37
150	16	1150162	148	285	240	22	8	210	625	410	44
150	25	1150252	148	300	250	26	8	210	625	410	46
200	16	1200162	200	340	295	22	12	230	625	530	71
200	25	1200252	200	360	310	26	12	230	625	530	72,6
250*	16	1250162/G	248	405	355	26	12	275	-	750	140
250*	25	1250252/G	248	425	370	30	12	275	-	750	140
300*	16	1300162/G	300	460	410	26	12	-	-	750	236
300*	25	1300252/G	300	485	430	30	16	-	-	750	249
350*	16	1350162/G	390	520	470	26	16	-	-	990	422
350*	25	1350252/G	390	555	490	33	16	-	-	990	449
400*	16	1400162/G	390	580	525	30	16	-	-	990	468
400*	25	1400252/G	390	620	550	36	16	-	-	990	496
500*	16	1500162/G	500	715	650	33	20	-	-	1017	878
500*	25	1500252/G	500	730	660	36	20	-	-	1017	899
600*	16	1600162/G	600	840	770	36	20	-	-	1173	1211
600*	25	1600252/G	600	845	770	39	20	-	-	1173	1233
700*	16	1700162/G	700	910	840	36	24	-	-	1376	2500
700*	25	1700252/G	700	960	875	42	24	-	-	1376	2550

*To be supplied with a gearbox on default. H indicated for valve with gearbox.
** Other measurements on request.

BALL VALVE

THREAD/THREAD

MATERIAL SPECIFICATION (Mat. code 02)

Body: carbon steel
Stem: stainless steel AISI 420
Ball: stainless steel AISI 304, AISI 409
Stem seal: EPDM, FVMQ
Ball seal: PTFE+C with additional seal made of FVMQ
Thread: straight pipe thread

OPERATION

- **DN 15-100:** lever – painted carbon steel with polymer end

Gearbox in horizontal arrangement on default

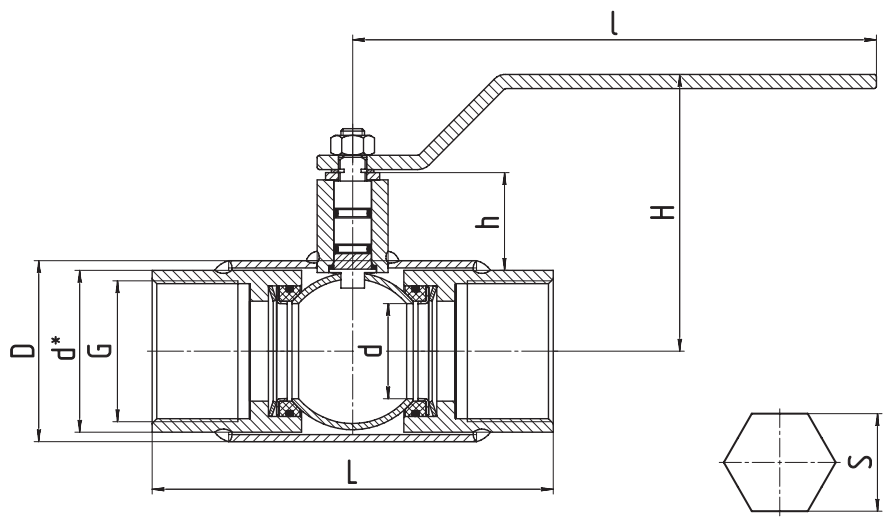

TECHNICAL DATA **FOR REDUCED BORE**

DN	PN	CODE	S	d*	d	D	G	h	H	l	L	Weight, kg
15	40	3159402	27	-	10	38	1/2	23	98	159	135	0,8
20	40	3209402	32	-	15	42	3/4	21	98	159	135	0,8
25	40	3259402	41	-	18	48	1	21	101	159	135	1,2
32	40	3329402	-	48	24	57	1 1/4	23	106	159	135	1,5
40	40	3409402	-	55	30	60	1 1/2	39	108	217	155	1,9
50	40	3509402	-	68	40	76	2	43	116	217	170	2,9
65	25	3659252	-	84	49	89	2 1/2	39	121	217	190	4
80	25	3809252	-	98	63	114	3	61	155	314,5	200	5,8
100	25	31009252	-	133	75	133	4	61	165	314,5	240	11,7

TECHNICAL DATA **FOR FULL BORE**

DN	PN	CODE	S	d*	d	D	G	h	H	l	L	Weight, kg
15	40	315402	27	-	15	42	1/2	23	98	159	135	0,8
20	40	320402	41	-	18	48	3/4	21	98	159	135	1,2
25	40	325402	41	-	24	57	1	21	101	159	135	1,5
32	40	332402	-	55	30	60	1 1/4	23	106	217	155	1,9
40	40	340402	-	68	40	76	1 1/2	39	108	217	170	2,9
50	40	350402	-	81	49	89	2	43	116	217	190	4,0
65	25	365252	-	99	64	114	2 1/2	39	121	314,5	200	5,8
80	25	380252	-	133	75	133	3	61	155	314,5	240	11,5

SERVICE BALL VALVE

COMBINED (THEREAD/WELD)

MATERIAL SPECIFICATION (Mat. code 02)

Body: carbon steel
Stem: stainless steel AISI 420
Ball: stainless steel AISI 304, AISI 409
Stem seal: EPDM, FVMQ
Ball seal: PTFE+C with additional seal made of FVMQ
Thread: straight pipe thread

OPERATION

. **DN 15-100:** lever – painted carbon steel with polymer end

Gearbox in horizontal arrangement on default

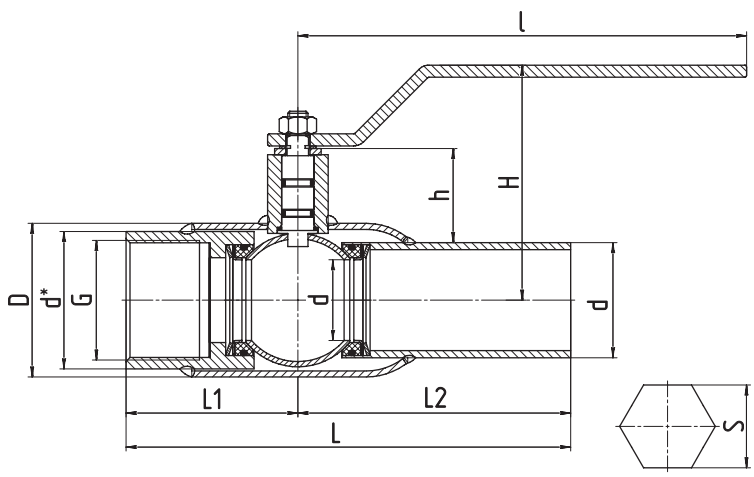

TECHNICAL DATA

DN	PN	CODE	S	d*	D	G	L1	L2	l	d	L	Weight, kg
15	40	4159402	27	-	38	1/2	67,5	100	159	21,3	183	0,5
20	40	4209402	32	-	42	3/4	68	100	159	26,9	183	0,7
25	40	4259402	41	-	48	1	68	115	159	33,7	183	1,0
32	40	4329402	-	48	57	1 1/4	68	115	159	42,4	198	1,1
40	40	4409402	-	55	60	1 1/2	78	125	217	48,3	208	1,6
50	40	4509402	-	68	76	2	85	135	217	60,3	235	2,4
65	25	4659252	-	84	89	2 1/2	95	140	217	76,1	245	3,4
80	25	4809252	-	98	114	3	100	140	314,5	88,9	250	5,1
100	25	41009252	-	133	133	4	120	150	314,5	114,3	283	8,7

BALL VALVE REDUCED BORE

COMBINED (FLANGE/WELD)

MATERIAL SPECIFICATION (Mat. code 02)

Body: carbon steel
Stem: stainless steel AISI 420
Ball: stainless steel AISI 304, AISI 409
Stem seal: EPDM, FVMQ
Ball seal: PTFE+C with additional seal made of FVMQ

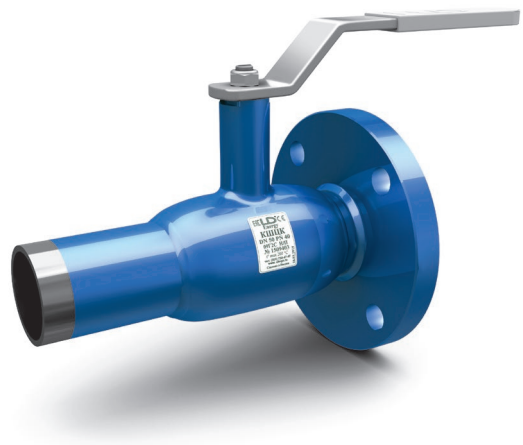

OPERATION

- **DN 15-250:** lever – painted carbon steel with polymer end
- **DN 125-250:** manual gearbox with worm gear recommended

Gearbox in horizontal arrangement on default

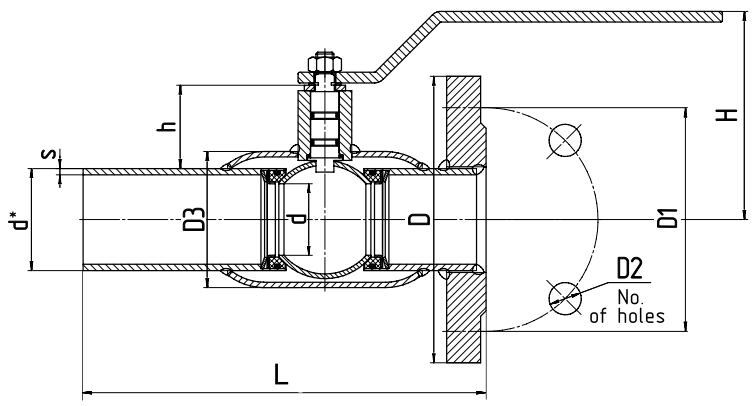

TECHNICAL DATA

DN	PN	CODE	d	d*	s	D3	h	H	L	D1	D2	No. of holes	D	Weight, kg
15	40	5159402	10	21,3	2,0	38	23	98	180	65	14	4	95	1,5
20	40	5209402	15	26,9	2,3	42	21	98	190	75	14	4	105	1,9
25	40	5259402	18	33,7	2,6	48	21	101	195	85	14	4	115	2,0
32	40	5329402	24	42,4	2,6	57	23	106	220	100	18	4	140	3,0
40	40	5409402	30	48,3	2,6	60	39	108	230	110	18	4	150	4,5
50	40	5509402	40	60,3	2,9	76	43	116	265	125	18	4	165	5,3
65	16	5659162	45	76,1	2,9	89	39	121	285	145	18	8	185	7,2
65	25	5659252	45	76,1	2,9	89	39	121	285	145	18	8	185	7,4
80	16	5809162	63	89,9	3,2	114	61	155	290	160	18	8	200	9,0
80	25	5809252	63	89,9	3,2	114	61	155	290	160	18	8	200	9,3
100	16	51009162	75	114,3	3,6	133	61	165	312,5	180	18	8	220	12,3
100	25	51009252	75	114,3	3,6	133	61	165	312,5	190	22	8	235	12,8
125	16	51259162	100	139,7	4,0	180	73	195	325	210	18	8	250	25,0
125	25	51259252	100	139,7	4,0	180	73	195	325	220	26	8	270	25,4
150	16	51509162	125	168,3	4,5	219	77	210	350	240	22	8	285	26,3
150	25	51509252	125	159	4,5	219	77	210	350	250	26	8	300	26,9
200	16	52009162	148	219	4,5	273	67	230	400	295	22	12	340	45,5
200	25	52009252	148	219	4,5	273	67	230	400	310	26	12	360	45,5
250	16	52509162	200	273	4,5	351	80	275	530	355	26	12	405	84,5
250	25	52509252	200	273	4,5	351	80	275	530	370	30	16	425	84,5

UNDERGROUND BALL VALVE REDUCED BORE

WELD/WELD

MATERIAL SPECIFICATION

Body: carbon steel
Stem: carbon steel
Ball: stainless steel AISI 304, AISI 409
Stem seal: EPDM, FVMQ
Ball seal: PTFE+C with additional seal made of FVMQ
Stem top: stainless steel AISI 321

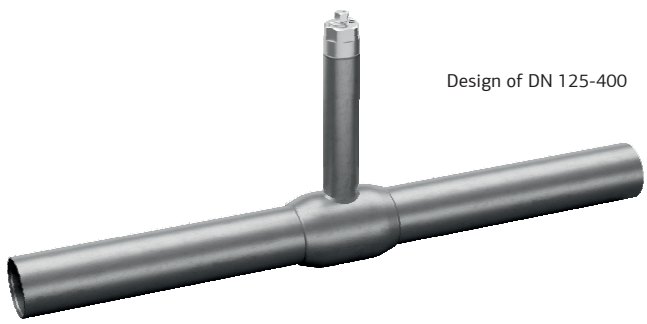

Design of DN 125-400

OPERATION

. **DN 25-400:** (free shaft) - T-key/Portable gear
. **DN 500:** (free shaft) - ISO top flange for manual gear on default

DN25-100 DN125-400 DN500

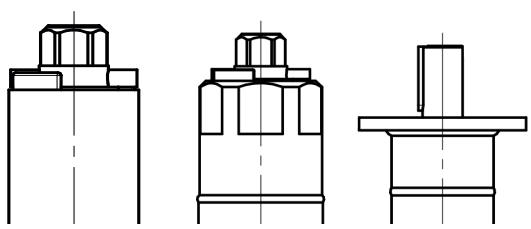

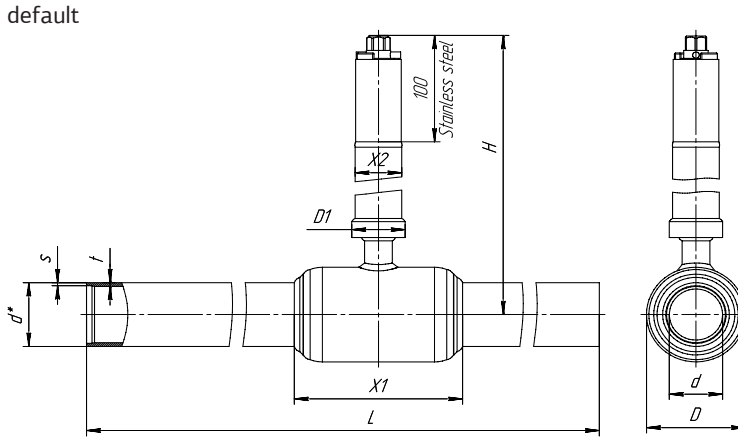

TECHNICAL DATA DN25-100

DN	PN	CODE	d	d*	D	H	s	t	L	Weight, kg
25	40	HSL2259403	18	33,7	48	480	2,3	3,5	1510	6,8
32	40	HSL2329403	24	42,4	57	485	2,6	4	1510	8,9
40	40	HSL2409403	30	48,3	60	495	2,6	4	1510	9,9
50	40	HSL2509403	40	60,3	76	500	2,9	3,5	1510	12,4
65	25	HSL2659253	49	76,1	89	504	2,9	4	1510	16,6
80	25	HSL2809253	63	88,9	114	515	3,2	4	1510	22,2
100	25	HSL21009253	75	114,3	133	525	3,6	5	1510	31,6

TECHNICAL DATA DN125-400

DN	PN	CODE	d	d*	D	H	s	t	L	Weight, kg
125	25	HSL21259253	100	139,7	180	545	4	5	1510	40,2
150	25	HSL21509253	125	168,3	219	565	4,5	6	1510	58,5
200	25	HSL22009253	148	219,1	273	585	4,5	8	1510	100,5
250	25	HSL22509253	200	273	351	613	5	8	1510	142,1
300	25	HSL23009253	240	323,9	426	664	6,3	10	1810	242,5
350	25	HSL23509253	300	355,6	530	664	6,3	10	1810	319,9
400	25	HSL24009253	300	406	530	793	7	10	1810	428,9

TECHNICAL DATA DN500

DN	PN	CODE	d	d*	D	H	s	t	L	Weight, kg
500	25	HSL25009253/E	390	508	630	824	7	10	1810	562

UNDERGROUND BALL VALVE FULL BORE

WELD/WELD

MATERIAL SPECIFICATION

Body: carbon steel
Stem: carbon steel
Ball: stainless steel AISI 304, AISI 409
Stem seal: EPDM, FVMQ
Ball seal: PTFE+C with additional seal made of FVMQ
Stem top: stainless steel AISI 321

Design of DN 25-80

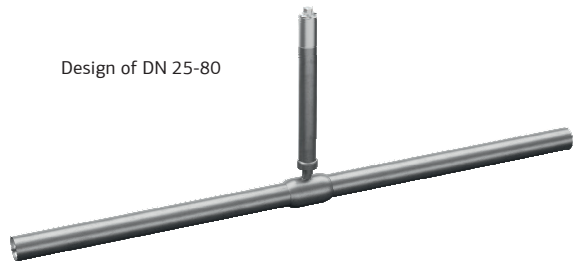

OPERATION

. **DN 25-300:** (free shaft) - T-key/Portable gear
. **DN 400-500:** (free shaft) - ISO top flange for manual gear on default

DN25-80 DN100-300 DN400-500

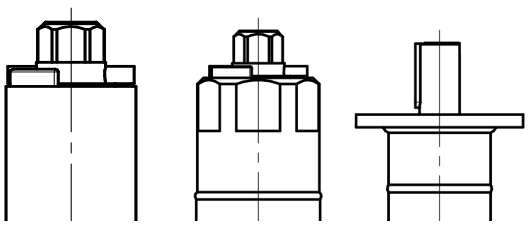

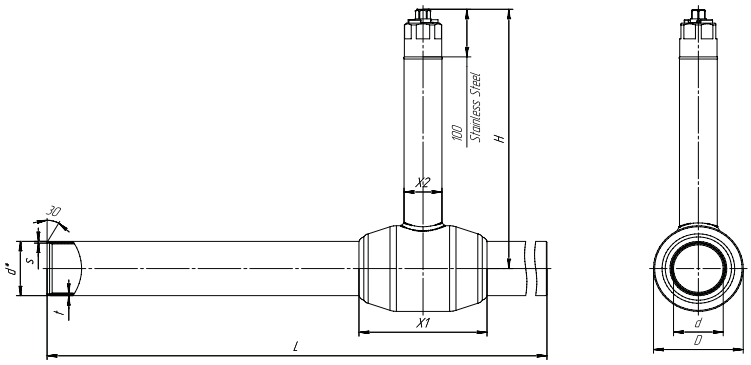

TECHNICAL DATA DN25-80

DN	PN	CODE	d	d*	D	H	s	t	L	Weight, kg
25	40	HSL225403	24	33,7	57	485	2,3	3,5	1510	7,8
32	40	HSL232403	30	42,4	60	495	2,6	4	1510	9,0
40	40	HSL240403	40	48,3	76	500	2,6	4	1510	10,5
50	40	HSL250403	48	60,3	89	504	2,9	3,5	1510	12.9
65	25	HSL265253	63	76	114	515	2,9	4	1510	16,7
80	25	HSL280253	75	88,9	133	525	3,2	4	1510	24,1

TECHNICAL DATA DN125-300

DN	PN	CODE	d	d*	D	H	s	t	L	Weight, kg
100	25	HSL2100253	100	114,3	180	545	3,6	5	1510	33,8
125	25	HSL2125253	125	139,7	219	565	4	5	1510	47,5
150	25	HSL2150253	148	168,3	273	585	4,5	6	1510	72,5
200	25	HSL2200253	200	219	351	613	5	8	1510	117,7
250	25	HSL2250253	240	273	426	664	5	8	1510	204,6
300	25	HSL2300253	300	323,9	530	664	6,3	10	1810	267,0

TECHNICAL DATA DN400-500

DN	PN	CODE	d	d*	D	H	s	t	L	Weight, kg
400	25	HSL2400253/E	386	406	630	824	7	10	1810	579
500	25	HSL2500253/E	500	508	820	1000	7	12	1810	999

UNDERGROUND BALL VALVE AIR RELEASE
REDUCED BORE

WELD/WELD

MATERIAL SPECIFICATION

Body: stainless steel AISI 321
Stem: stainless steel AISI 321
Ball: stainless steel AISI 304, AISI 409
Stem seal: EPDM, FVMQ
Ball seal: PTFE+C with additional seal made of FVMQ
Stem top: stainless steel AISI 321

OPERATION

. DN 15-100: (HEX) - T-Key

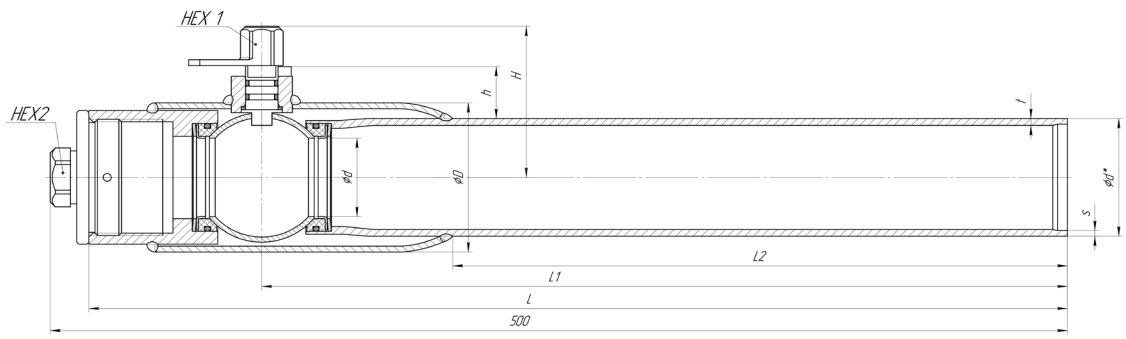

TECHNICAL DATA

DN	PN	CODE	d	d*	D	H	s	t	L	Weight, kg
15	40	HSL4159401	10	21,3	38	58	2	3	485	1,34
20	40	HSL4209401	15	26,9	42	59	2	3	485	1,48
25	40	HSL4259401	18	33,7	48	61	2,3	3,5	485	2,04
32	40	HSL4329401	24	42,4	57	66	2,6	4	483	2,8
40	40	HSL4409401	30	48,3	60	69	2,6	4	487	3,24
50	40	HSL4509401	40	60,3	76	77	2,9	3,5	481	4,18
65	25	HSL4659251	48	76,1	89	84	2,9	4	471	6,2
80	25	HSL4809251	63	88,9	114	113	3,2	4	470	10,3
100	25	HSL41009251	75	114,3	133	122	3,6	5	470	14,4

BRANCHING VALVE
REDUCED BORE

WELD/WELD

MATERIAL SPECIFICATION (Mat. code 02)

Body: carbon steel
Stem: stainless steel AISI 431 (1.4057)
Ball: stainless steel AISI 304, AISI 409
Stem seal: EPDM, FVMQ
Ball seal: PTFE+C with additional FVMQ seal

OPERATION

. **DN 20-200:** socket wrench

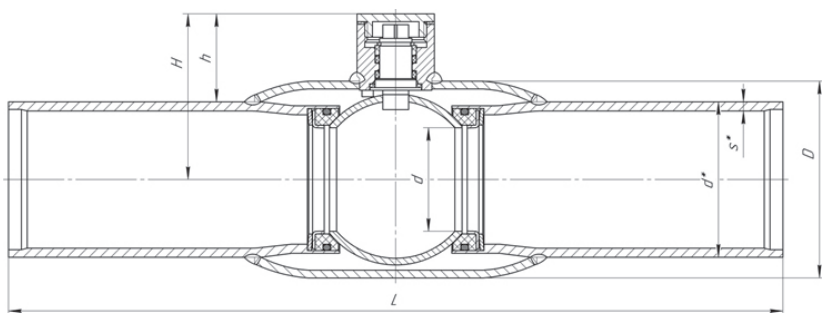

TECHNICAL DATA

DN	PN	CODE	d	d*	D	H	h	s	L	Weight, kg
25	40	B2259402	18	33,5	48	42	26	3,2	230	1,1
32	40	B2329402	24	42	57	46	25,5	3,0	260	1,5
40	40	B2409402	30	48	60	55,5	31,5	4,0	260	2,0
50	40	B2509402	40	60	76	64	34	3,5	300	2,2
65	25	B2659252	48	76	89	68	30	2,9	300	3,4
80	25	B2809252	63	89	114	87	30	4,0	300	4,8
100	25	B21009252	75	114	133	96,5	30	5,0	325	7,2
125	25	B21259252	100	140	180	125	35	5,0	325	14,5
150	25	B21509252	125	168	219	140	31	6,0	350	21,7
200	25	B22009252	148	219	273	174	38	8,0	400	32,0
250	25	B22509252	200	273	351	213	38	8,0	530	62,7

HOT TAPPING VALVE
FULL BORE

COMBINED (FLANGE/WELD)

MATERIAL SPECIFICATION (Mat. code 02)

Body: carbon steel
Stem: stainless steel AISI 431 (1.4057)
Ball: stainless steel AISI 304, AISI 409
Stem seal: EPDM, FVMQ
Ball seal: PTFE+C with additional FVMQ seal

OPERATION

. DN 25-200: socket wrench

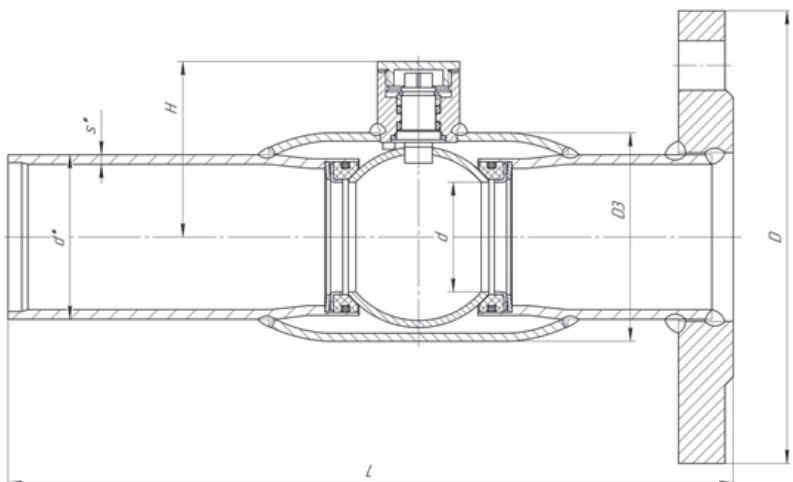

TECHNICAL DATA

DN	PN	CODE	d	d*	D	H	s	D	L	Weight, kg
25	40	B525402	18	33,5	48	42	3,2	115	195	2,0
32	40	B532402	24	42	57	46	3,0	140	220	2,8
40	40	B540402	30	48	60	55,5	4,0	150	230	3,5
50	40	B550402	40	60	76	64	3,5	165	265	4,2
65	25	B565252	48	76	89	68	2,9	185	285	6,1
80	25	B580252	63	89	114	87	4,0	200	290	7,7
100	16	B5100252	75	114	133	96,5	5,0	220	312	11
100	25	B5100252	75	114	133	96,5	5,0	235	312	12,1
125	16	B5125252	100	140	180	125	5,0	250	325	19,8
125	25	B5125252	100	140	180	125	5,0	270	325	22,3
150	16	B5150252	125	168	219	140	6,0	285	350	28,4
150	25	B5150252	125	168	219	140	6,0	300	350	31,9
200	16	B5200252	148	219	273	174	8,0	340	400	42
200	25	B5205252	148	219	273	174	8,0	360	400	45,6
250	16	B5250252	200	273	351	213	8,0	405	530	77,4
250	25	B5250252	200	273	351	213	8,0	425	530	81,4

LD BALL VALVE WITH MANUAL GEAR

APPLICATION

Recommended when high torques for opening-closing of the valve are needed

Gearbox in horizontal arrangement*

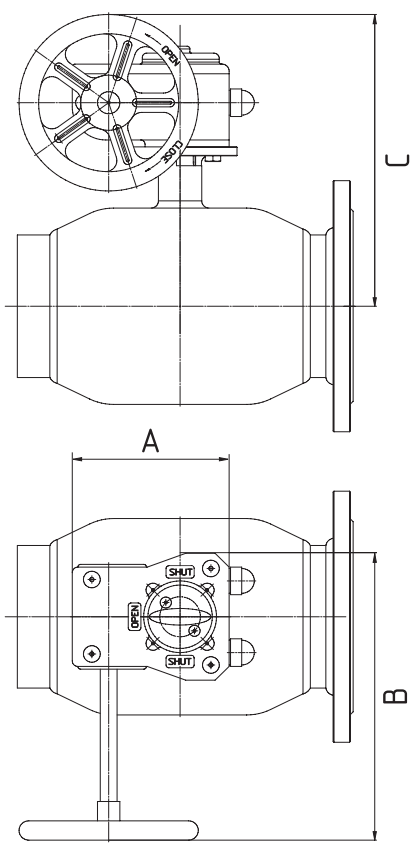

* to be supplied with a wheel with all valve types on default

Gearbox in vertical arrangement*

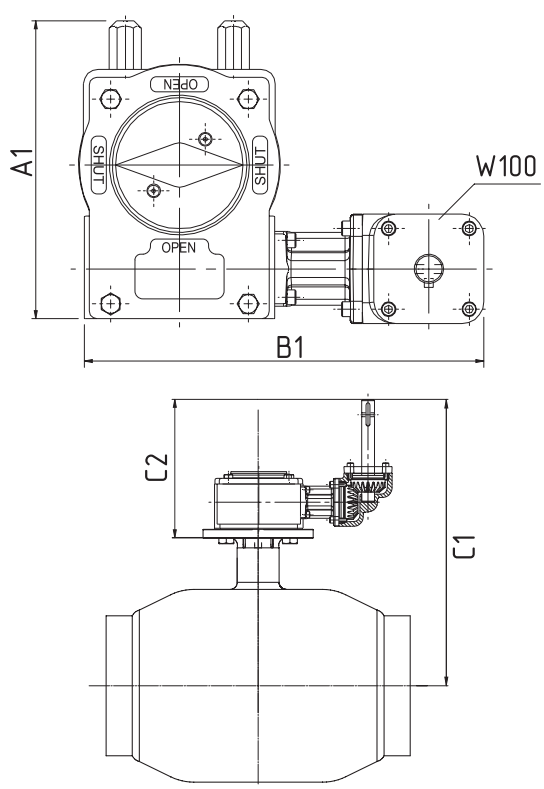

* to be supplied with a wheel on demand
** Allen key for 32 mm to be supplied on demand

TECHNICAL DATA **FOR REDUCED BORE**

DN	Gear type	Gear weight without wheel, kg	A (length)	B (width)	C (height)	Wheel diameter, mm	Gear type (vertical)	Gear weight without wheel, kg	Gear weight with wheel, kg	A1 (length)	B1 (width)	C1 (height)	C2 (height)
25	242-10M	1	82	112	151	100	-	-	-	-	-	-	-
32	242-10M	1	82	112	155	100	-	-	-	-	-	-	-
40	242-10M	1	82	112	168	100	-	-	-	-	-	-	-
50	242-10M	1	82	112	176	100	-	-	-	-	-	-	-
65	242-10M	1	82	112	181	100	-	-	-	-	-	-	-
80	242-20S	1,5	100	137	202	100	-	-	-	-	-	-	-
100	242-20S	1,5	100	137	212	100	-	-	-	-	-	-	-
125	242-30S	3,4	131	173	289	200	AB550W DMW100 исп.1	9	12,7	174	275	362	201
150	242-30S	3,4	131	173	306	200	AB550W DMW100 исп.1	9	12,7	174	275	379	201
200	242-30S	3,4	131	173	330	200	AB550W DMW100 исп.1	9	12,7	174	275	403	201
250	242-40S	5,7	163	226,5	471	400	AB550W DMW100 исп.2	9	12,7	174	275	437	201
300	AB1250N	22	258	340	678	600	AB1250W DMW100	22	25,7	267	344	542	208,5
350	AB2000N	24	269	339	740	600	E2000W MW100	24	29,3	277	410	600	216,5
400	AB2000N	24	269	339	740	600	E2000W MW100	24	29,3	277	410	600	216,5
500	AB6800N/PR6	64,2	407	539	745	500	E6800W/PR6 MW100	64,2	69,5	407	610	660	219,5
600	AB6800N/PR6	64,2	407	539	838	500	E6800W/PR6 MW100	64,2	69,5	407	610	749	219,5
700	A200N/PR10	134,4	492	594,5	980	500	E200W/PR10 MW100	134,4	139,7	492	665,5	891	245,4
800	A250N/PR10	219	585	786	1225	700	E250W/PR10 MW100	219	224,3	585	741	1036	246

Adapter for 32 mm hexagon shaft

* indicates connection type: 1 flange, 2 welding end, 3 thread, 4 drain or combined

TECHNICAL DATA **FOR FULL BORE**

DN	Gear type	Gear weight without wheel, kg	A (length)	B (width)	C (height)	Wheel diameter, mm	Gear type (vertical)	Gear weight without wheel, kg	Gear weight with wheel, kg	A1 (length)	B1 (width)	C1 (height)	C2 (height)
20	242-10M	1	82	112	151	100	-	-	-	-	-	-	-
25	242-10M	1	82	112	155	100	-	-	-	-	-	-	-
32	242-10M	1	82	112	168	100	-	-	-	-	-	-	-
40	242-10M	1	82	112	176	100	-	-	-	-	-	-	-
50	242-10M	1	82	112	181	100	-	-	-	-	-	-	-
65	242-20S	1,5	100	137	202	125	-	-	-	-	-	-	-
80	242-20S	1,5	100	137	212	125	-	-	-	-	-	-	-
100	242-30S	3,4	131	173	289	125	AB550W DMW100 исп.1	9	12,7	174	275	362	201
125	242-30S	3,4	131	173	301	125	AB550W DMW100 исп.1	9	12,7	174	275	379	201
150	242-30S	3,4	131	173	330	300	AB550W DMW100 исп.1	9	12,7	174	275	403	201
200	242-40S	5,7	163	226	471	400	AB550W DMW100 исп.2	9	12,7	174	275	437	201
250	AB1250N	22	258	340	678	600	AB1250W DMW100	22	25,7	267	344	542	208,5
300	AB2000N	24	255	339	740	600	E2000W MW100	24	29,3	277	410	600	216,5
350	AB6800N/PR6	64,2	407	539	745	500	E6800W/PR6 MW100	64,2	69,5	407	610	605	219,5
400	AB6800N/PR6	64,2	407	539	745	500	E6800W/PR6 MW100	64,2	69,5	407	610	605	219,5
500	AB6800N/PR6	64,2	407	539	838	500	E6800W/PR6 MW100	64,2	69,5	407	610	660	219,5
600	A200N/PR10	134,4	492	594,5	980	500	E200W/PR10 MW100	134,4	139,7	492	665,5	891	245,5
700	A250N/PR10	219	585	786	1225	700	E250W/PR10 MW100	219	224,3	585	741	1036	246
800	A250N/PR10	219	585	786	1290	800	E250W/PR10 MW100	219	224,3	585	741	1100	246

Adapter for 32 mm hexagon shaft

LD reserves the right to apply gears of any manufacturer if it doesn't deteriorates technical characteristics

LD BALL VALVE WITH ELECTRIC ACTUATOR AUMA

FLANGE/FLANGE OR WELD/WELD

APPLICATION

Electric actuators are recommended for control of the valve at high opening and closing torques as well as for preventing hydraulic shocks in the pipeline.

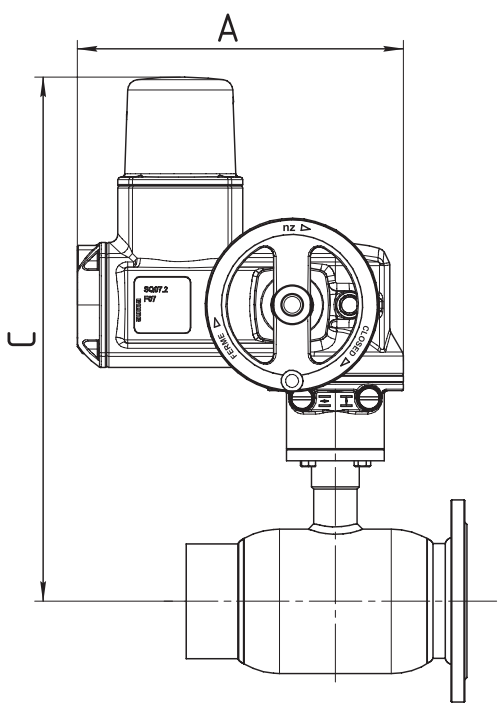

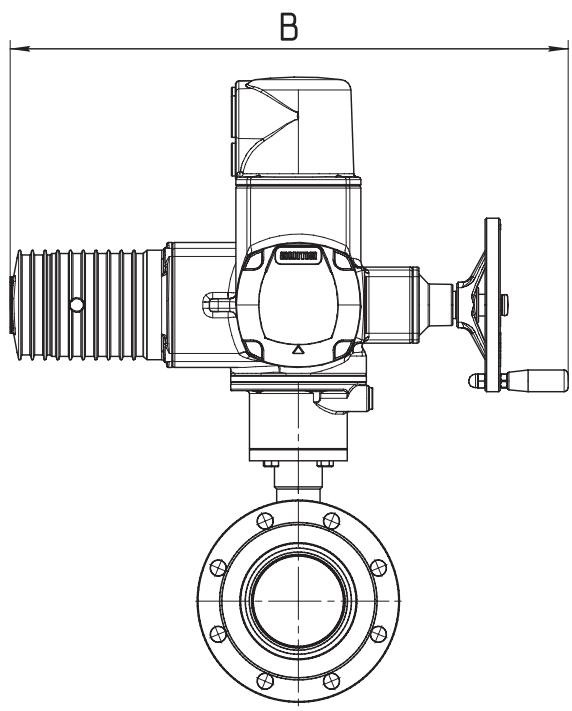

TECHNICAL DATA OF MEOF SERIES SINGLE-TURN FLANGE ELECTRIC ACTUATORS FOR REDUCED BORE

AUMA

DN	PN	CODE	Gear type	Actuator weight, kg	Overall dimensions, mm			
					A	B	C	D
20	40	*209402	SG 05.1 (SQ 05.2)	23	358	337	490	263
25	40	*259402	SG 05.1 (SQ 05.2)	23	361	337	490	263
32	40	*329402	SG 05.1 (SQ 05.2)	23	366	337	490	263
40	40	*409402	SG 05.1 (SQ 05.2)	23	356	326	490	263
50	40	*509402	SG 05.1 (SQ 05.2)	23	365	327	490	263
65	16	*659162	SG 05.1 (SQ 05.2)	23	369	325	490	263
65	25	*659252	SG 05.1 (SQ 05.2)	23	369	325	490	263
80	16	*809162	SG 07.1 (SQ 07.2)	24	405	348	490	263
80	25	*809252	SG 07.1 (SQ 07.2)	24	405	348	490	263
100	16	*1009162	SG 07.1 (SQ 07.2)	24	414	348	490	263
100	25	*1009252	SG 07.1 (SQ 07.2)	24	414	348	490	263
125	16	*1259162	SG 10.1 (SQ 10.2)	27	451	361	506	310
125	25	*1259252	SG 10.1 (SQ 10.2)	27	451	361	506	310
150	16	*1509162	SG 10.1 (SQ 10.2)	27	468	359	506	310
150	25	*1509252	SG 10.1 (SQ 10.2)	27	468	359	506	310
200	16	*2009162	SG 10.1 (SQ 10.2)	27	493	356	506	310
200	25	*2009252	SA 07.6/GS 63.3	33	493	356	506	310
250	16	*2509162	SG 12.1 (SQ 12.2)	28	550	374	506	390
250	25	*2509252	SA 10.2/GS 80.3	42	837	661	550	320
300	16	*3009162	SA 10.2/GS 125.3/VZ 4.3 (SA 07.6/GS 100.3/VZ 4.3)	73	1120	907	550	340
300	25	*3009252	SA 10.2/GS 125.3/VZ 4.3 (SA 07.6/GS 100.3/VZ 4.3)	73	1120	907	550	340
350	16	*3509162	SA 10.2/GS 125.3/VZ 4.3	73	1174	908	550	340
350	25	*3509252	SA 10.2/GS 125.3/VZ 4.3	73	1174	908	550	340
400	16	*4009162	SA 10.2/GS 125.3/VZ 4.3	73	1174	908	550	340
400	25	*4009252	SA 10.2/GS 125.3/VZ 4.3	73	1174	908	550	340
500	16	*5009162	SA 10.2/GS 160.3/GZ 8:1 (SA 10.2/GS 200.3/GZ 16:1)	120 (200)	1226	911	990	340
500	25	*5009252	SA 10.2/GS 160.3/GZ 8:1 (SA 10.2/GS 200.3/GZ 16:1)	120 (200)	1226	911	990	340
600	25	*6009252	SA 10.2/GS 160.3/GZ 8:1 (SA 10.2/GS 200.3/GZ 16:1)	120 (200)	1226	911	990	340
700	25	*7009252	SA 10.2/GS 160.3/GZ 8:1 (SA 10.2/GS 200.3/GZ 16:1)	120 (200)	1226	911	990	340

* indicates connection type: 1 flange, 2 welding end, 3 thread, 4 drain or combined

Valve production for other electric, pneumatic and hydraulic actuator on request.

DURING MAINTENANCE PLEASE FOLLOW THE INSTRUCTIONS BELOW:

1. Maintenance of electric actuators has to be carried out according to the «Instructions for Operating User's Electrical Equipment»;
2. Installation site should have sufficient illumination;
3. Electric actuator case should be grounded;
4. Make sure you use fault-free tools when working with electric actuators;
5. Getting to scheduled maintenance, make sure the electric actuator is cut-off from the power supply network.

CONTROL BALL VALVES REGULA

APPLICATION

Control ball valves provide predictable and accurate control of flow rates in the pipeline, where the valve is mounted. The flow rate is controlled by means of a lever with a scale and flow rate control with linear relation. Special design of the ball with a figured groove allows to reduce noise and to increase control accuracy. The valve is installed on the pipeline according to the arrow specifying the direction of the working media.

KV values

Value	DN20	DN25	DN32	DN40	DN50	DN65	DN80	DN100	DN125	DN150	DN200	DN250	DN300
1	0,24	0,43	0,80	1,40	0,96	1,51	2,45	3,50	6,34	13,94	12,02	22,81	17,89
2	0,71	1,12	1,90	3,20	2,70	3,86	7,00	9,91	16,92	29,55	34,34	63,9	75,75
3	1,41	2,13	3,40	5,70	5,10	7,42	13,11	18,54	31,32	50,94	65,95	119,81	157,34
4	2,39	3,49	5,50	8,90	8,30	12,06	21,11	29,64	61,41	78,37	106,17	192,54	265,93
5	3,78	5,33	8,20	12,90	12,40	18,46	32,15	44,79	74,07	121,25	159,11	284,09	406,41
6	5,8	7,87	11,70	16,60	21,10	29,05	53,09	73,80	122,48	202,90	260,95	464,33	691,25
7	8,66	10,58	15,10	20,70	32,20	44,15	80,44	111,49	181,56	310,21	396,37	727,46	1087,56
8	10,85	11,01	17,30	24,40	46,60	62,52	114,41	158,04	273,06	446,84	563,61	1040,13	1588,03
9	11,22	12,33	17,70	26,70	58,40	76,88	140,48	196,42	356,01	631,54	700,47	1398,57	2023,56

Weight and overall dimensions are equal to shut off valves with corresponding diameter

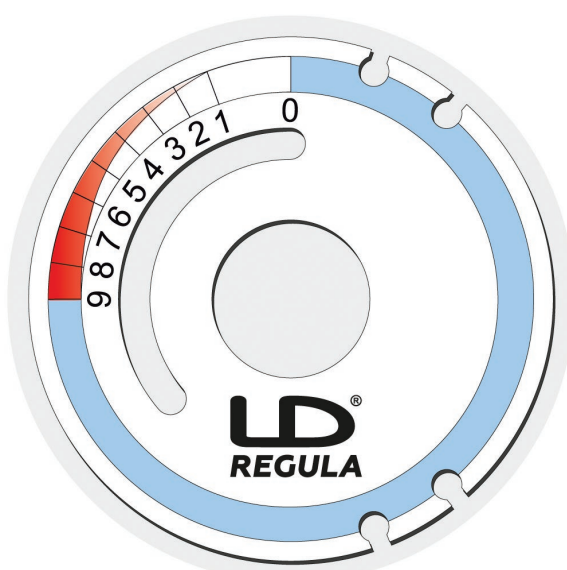

CONTROL BALL VALVE *REGULA*

WELD/WELD

MATERIAL SPECIFICATION (Mat.code 02)

Body: carbon steel
Stem: stainless steel AISI 420
Ball: stainless steel AISI 304, AISI 409
Stem seal: EPDM, FVMQ
Ball seal: PTFE+C with additional seal made of FVMQ
Measurement units: brass

OPERATION

- **DN 15-100:** lever – galvanized carbon steel with polymer end
- **DN 125-300:** with manual gearbox on default

DN20-100

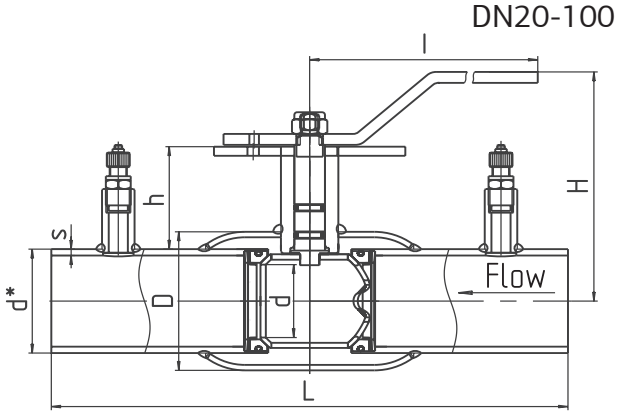

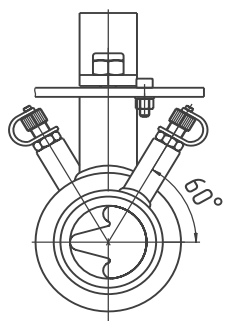

DN125-300

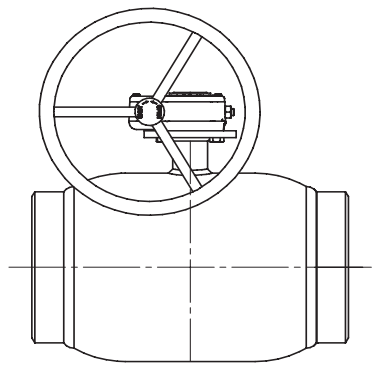

TECHNICAL DATA **FOR REDUCED BORE**

DN	PN	CODE	d*	s	D	h	H	l	L	Weight, kg
20	40	R2209402	27	2,8	42	60	135	160	200	1,1
25	40	R2259402	33,5	3,2	48	60	138	160	230	1,3
32	40	R2329402	38	3	57	61,5	142	160	230	1,5
40	40	R2409402	48	3,5	60	43	108	215	250	2
50	40	R2509402	57	3,5	76	40	110	215	270	2,2
65	25	R2659252	76	4	89	35	114	215	280	3,43
80	25	R2809252	89	4	114	56	159	295	280	5,5
100	25	R21009252	108	5	133	54	166	295	300	7,6
125	25	R21259252/G	133	5	180	95	-	-	330	13,7
150	25	R21509252/G	159	6	219	98	-	-	360	19
200	25	R22009252/G	219	8	273	94	-	-	450	31,4
250	25	R22509252/G	273	8	351	101	-	-	510	64,2
300	25	R23009252/G	325	10	426	164	-	-	730	120,2

CONTROL BALL VALVE *REGULA*

FLANGE/FLANGE

MATERIAL SPECIFICATION (Mat.code 02)

Body: carbon steel
Stem: stainless steel AISI 420
Ball: stainless steel AISI 304, AISI 409
Stem seal: EPDM, FVMQ
Ball seal: PTFE+C with additional seal made of FVMQ
Measurement units: brass

OPERATION

- **DN 20-100:** lever – galvanized carbon steel with polymer end
- **DN 125-300:** with manual gearbox on default

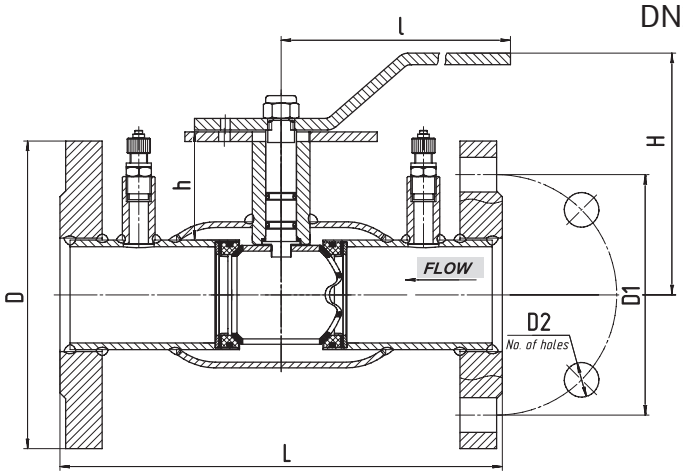

DN20-100

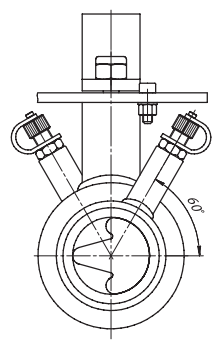

DN125-300

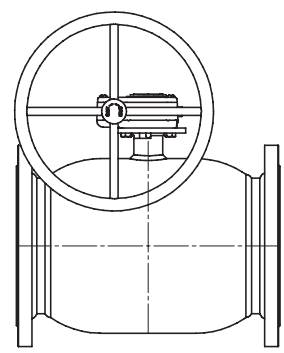

TECHNICAL DATA **FOR REDUCED BORE**

DN	PN	CODE	D	D1	D2	No. of holes	h	H	l	L	Weight, kg
20	40	R1209402	105	75	14	4	60	135	160	240	2,2
25	40	R1259402	115	85	14	4	60	138	160	240	2,7
32	40	R1329402	135	100	18	4	61,5	142	160	270	3,7
40	40	R1409402	145	110	18	4	43	108	215	200	4,7
50	40	R1509402	158	125	18	4	40,2	110	215	230	7,0
65	16	R1659162	178	145	18	4	35	114	215	270	8,2
65	25	R1659252	178	145	18	8	35	114	215	270	7,8
80	16	R1809162	195	160	18	4	56	144	295	280	11
80	25	R1809252	195	160	18	8	56	144	295	280	10,7
100	16	R11009162	215	180	18	8	54	151	295	300	13,7
100	25	R11009252	230	190	22	8	54	151	295	300	16
125	16	R11259162/G	245	210	18	8	95	-	-	350	24,6
125	25	R11259252/G	270	220	26	8	95	-	-	350	30,5
150	16	R11509162/G	280	240	22	8	98	-	-	380	33
150	25	R11509252/G	300	250	26	8	98	-	-	380	37,5
200	16	R12009162/G	335	295	22	12	94	-	-	450	51
200	25	R12009252/G	360	310	26	12	94	-	-	450	57
250	16	R12509162/G	405	355	26	12	101	-	-	530	93
250	25	R12509252/G	425	370	30	12	101	-	-	530	101
300	16	R13009162/G	460	410	26	12	167	-	-	750	156
300	25	R13009252/G	485	430	30	16	164	-	-	750	168

APPLICATION

LD ball valves should be used as a stop valves on the pipelines. That means the valves should be fully opened or fully closed throughout the operation. Only REGULA series can be used for stream control!

INSTALLATION GUIDELINES

1. Valves can be installed on pipelines in any position providing ease of use and access to manual actuator.
2. All caps shall be removed from valve connections before installation.
3. During installation on horizontal pipelines, valve shall be fully opened.
4. During installation on vertical pipelines: a) valve shall be fully opened during the welding of the upper end (in order to avoid damage of ball surface and seat); b) valve shall be fully closed during the welding of the lower end (in order to avoid welding heat draught).
5. Before valve's installation, pipeline shall be cleared from dirt, sand, slag etc.
6. Use electric welding for connection of the valve to the pipeline.
7. During welding, avoid overheat of the valve body. The valve is considered to be overheated, if temperature of the valve body in the seat area exceeds 80°C during welding. Use wet rags to cool the valve seat area and avoid overheat.
8. It is prohibited to turn the ball immediately after welding (without prior cooling).
9. Reduction of end-to-end length of a welded ball valve is not acceptable as it is specially designed to avoid overheat of the ball seat during its installation on a pipeline.
10. During installation of LD flanged valves, inspection of flange sealing faces is necessary.
11. The bolts tightening on the flanged connections shall be equal along the whole perimeter using «criss-cross» method.
12. Parallelism of pipe and valve flange sealing faces within a tolerance of 0.2 mm is acceptable.
13. It is forbidden to eliminate distortions of the pipeline flanges using tensioning of valve's flanges.
14. The max. amplitude of the pipeline's vibration displacement shall not exceed 0.25 mm.
15. In order to avoid pressure shock in the pipeline, open and close the valve smoothly.
16. During installation and operation of the valve safety requirements shall be fulfilled in accordance with GOST-53672.
17. During lifting and/or transportation of valves by means of mechanical lifting devices it is prohibited to fasten and/or to grip the handles, gearbox wheels or parts of electric, pneumatic and hydraulic actuators.

ATTENTION!
When operating the ball valve DO NOT:

1. Use the valves as regulating
(In order to control flow rates use LD Regula Series);
2. Valve`s dismantling, works on a tightening of flange joints in the presence of an operating medium and pressure in pipeline;
3. Operate the valve without a respectively executed certificate
4. Operate the valve using levers extending the handle arm;
5. Use the valve as a pipeline support.

FLOW RATES OF LD BALL VALVE

DN	Ball valve reduced bore	Ball valve full bore
15	7	19
20	15	40
25	23	63
32	39	89
40	64	137
50	115	215
65	176	360
80	305	531
100	451	953
125	834	1512
150	1348	2146
200	1727	3885
250	3220	5680
300	4416	25500
350	9931	34625
400	13142	48679
500	18500	68600
600	32720	82730
700	42784	126408
800	55812	171933

Flow rates (KV values) are calculated in m^3/h at a pressure drop $\Delta p=1$ and a temperature of 15-25°C

CERTIFICATES

SGS
„SGS Beograd" d. o. o.
Jurija Gagarina 7b
11070 Beograd, Srbija

SERTIFIKAT O USAGLAŠENOSTI
CERTIFICATE OF CONFORMITY
modul H

Imenovano telo broj / Designated Body
И016

Sertifikat broj / *Certificate No.*: 221108

Prema Pravilniku o tehničkim zahtevima za projektovanje, izradu i ocenjivanje usaglašenosti opreme pod pritiskom (Službeni Glasnik RS broj 87/2011) /*According to Rulebook of technical requirements for design, manufacture and conformity assessment of pressure equipment (Official Gazette of RS 87/2011)*

Klijent / Client:	LLC ChelyabinskSpetsGrazhdanStroy, Yeniseyskaya str. 47, 454010 Chelyabinsk, Russian Federation / ООО "ЧелябинскСпецГражданСтрой", Российская Федерация, 454010 г.Челябинск, ул. Енисейская, 47
Proizvođač / *Manufacturer:*	
PREDMET OCENJIVANJA / *Subject of assessment:*	
Naziv opreme / *Equipment:*	**Loptaste slavine / *Ball valve***
Tip/Type:	**Ball valve LD type (max DN800, PN 16÷40, TS max 200°C), Ball valve LD Swift type (DN 32÷100, PN16, TS max 150°C)**

Ocenjivanje usaglašenosti predmetne opreme pod pritiskom izvršeno na osnovu zahteva br. / *Conformity assessment of the pressure equipment is done according to request No.* 221108
Izveštaj broj / *Report No.*: 50-2 0775/22

Note:
Proizvođač poseduje sertifikat o usaglašenosti opreme pod pritiskom/ *The manufacturer has certificate according to* PED 2014/68/EU, prema modulu/according to: module H,
izdate od Notifikovanog tela /issued by *Notified Body: 1354*
Validity of issued certificate correspond to validity of PED "CE" Certificate

IZJAVA O USAGLAŠENOSTI / *CONFORMITY STATEMENT*:

Ovim potvrđujemo da je predmetna oprema ocenjena prema zahtevima Pravilnika o tehničkim zahtevima za projektovanje, izradu i ocenjivanje usaglašenosti opreme pod pritiskom (Službeni Glasnik RS broj 87/2011). / *We hereby confirm that pressure equipment has been assessed in compliance with Rulebook on technical requirements for the design, manufacture and conformity assessment of pressure equipment*
Primenjeni modul/Module applied: H
Proizvođaču se odobrava nanošenje znaka usaglašenosti sa navođenjem identifikacionog broja „SGS Beograd" za proizvode koji su bili predmet ocenjivanja. *The manufacturer is authorized to apply the conformity mark with the indication number of designated body "SGS Beograd" for products which were the subject of conformity assessment*

Znak usaglašenosti / Conformity mark:
И016 22

Prilozi / *Attachments:* -	Važnost sertifikata / *Validity of Certificate:* 01.11.2025. Uz obavezne godišnje proverе / *With mandatory annual surveillance audits*

Mesto izdavanja / *Place of issue :* *Belgrade*

Datum izdavanja / *Date of issue :* *03.11.2022.*

„SGS Beograd" d. o. o.

Marinko Ukropina

SGS Belgrade Ltd

This document is issued by the Company under its General Conditions of Service accessible at http://www.sgs.com/en/Terms-and-Conditions.aspx. Attention is drawn to the limitation of liability, indemnification and jurisdiction issues defined therein.

Any holder of this document is advised that information contained hereon reflects the Company's findings at the time of its intervention only and within the limits of Client's instructions, if any. The Company's sole responsibility is to its Client and this document does not exonerate parties to a transaction from exercising all their rights and obligations under the transaction documents. Any unauthorized alteration, forgery or falsification of the content or appearance of this document is unlawful and offenders may be prosecuted to the fullest extent of the law.

SGS Beograd Ltd. Jurija Gagarina 7b 11000 Beograd Serbia t (381-11) 71.55.275 t (381-11) 71.55.276 t (381-11) 71.55.277
sgs_beograd @sgs.com www.sgs.com t (381-11) 71.55.278 f (381-11) 22.84.241 f (381-11) 71.55.279
Member of the SGS Group (Société Générale de Surveillance)

Strana/Page 1/1 F-SGS-22-009

RA.RU.13ИФ76

CERTIFICATION AGENCY OF QUALITY MANAGEMENT SYSTEMS
"MANAGEMENT AND SERTIFICATION", LLC
454007, RUSSIA, Chelyabinsk city, Lenina Avenue, 2,
building "Vostok", office number 402
№ RA.RU.13ИФ76

№ 00024

CERTIFICATE OF CONFORMITY

Issue 1. QMS is certified from December 2020
Issues to Limited Liability Company
«ChelyabinskSpetzGrazhdanStroy»
454010, Russia, Chelyabinsk, Yeniseyskaya str., 47

The present certificate certifies:

Quality management system in respect to design, development, production and supply of pipeline fittings and its components

The application is an integral part of the certificate

COMPLIES WITH THE REQUIREMENTS OF

GOST R ISO 9001-2015 (ISO 9001:2015)

Registration № РОСС RU.ИФ76.К00115

Registration date 23.12.2020 **Validity until** 23.12.2023

Head of the certification body for Quality Management Systems L.A. Ashihmina

Audit team leader N.A. Suraeva

TECHNICKÁ INŠPEKCIA · SLOVENSKÁ REPUBLIKA · TI

Technická inšpekcia, a.s.
Trnavská cesta 56, 821 01 Bratislava, Slovenská republika

CERTIFICATE
no. 1615/5/2022

Technická inšpekcia, a. s., Trnavská cesta 56, 821 01 Bratislava, Slovakia
notified body: 1354,
on the basis of results from assessment of full quality assurance system

notifies, that

LLC "ChelyabinskSpetsGrazhdanStroy"
Yeniseyskaya 47, 454010 Chelyabinsk, RUSSIA

implemented and applies system of full quality assurance (module H)

according to the European Directive 2014/68/EU on pressure equipment

Range of equipment:
Ball Valve - LD Type, DN 25 - 1000, PN 16 - 40, TS_{max} = 200 °C, TS_{min}= - 60 °C
made of carbon and stainless steel

Ball Valve - LD Swift Type, DN 32 - 100, PN 16, TS_{max} = 150 °C, TS_{min}= - 60 °C
made of carbon and stainless steel

Butterfly valve – LD type, DN 200 – 1200, PN 16 - 25, TS_{max} = 200 °C, TS_{min}= - 60 °C
made of carbon steel
(see Annex to the Certificate for details)

Audit Report no. 1615/5/2022

Manufacturer shall inform Technická inšpekcia, a. s. of any intended change of system of full quality assurance (module H).

Certificate is valid until 1st November 2025

The Certificate validity is conditioned with performing of surveillance by Technická inšpekcia, a.s. for minimum 1 periodic audit per 12 months. Performing of periodic audit is proved by Audit Report.

Date of initial notification: 1st October 2013

Bratislava, on 9th November 2022

TI NB 1354 · TECHNICKÁ INŠPEKCIA · SLOVENSKÁ REPUBLIKA

JUDr. Vladimír Jurík
General Director

CST4-190

A 014863

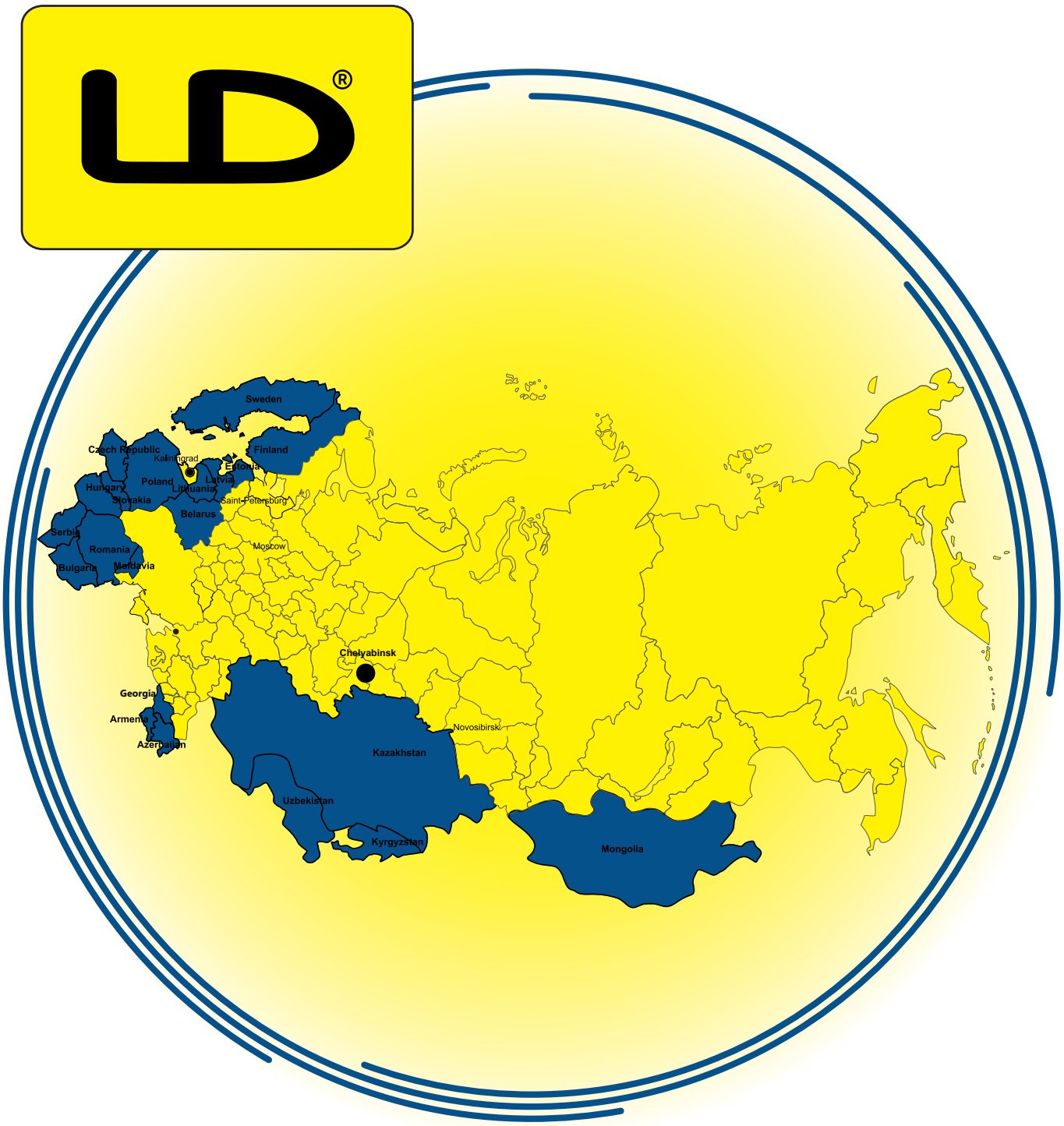

LD GROUP, Yeniseyskaya str. 47, 454010, Chelyabinsk, Russia
Phone: +7 (351) 730-47-47, ext. 105
e-mail: global@chsgs.ru

chsgs.com

chsgs.com

The content of this catalogue is for your reference only
and is subject to be revised any notice.
The catalogue may contain typographical errors